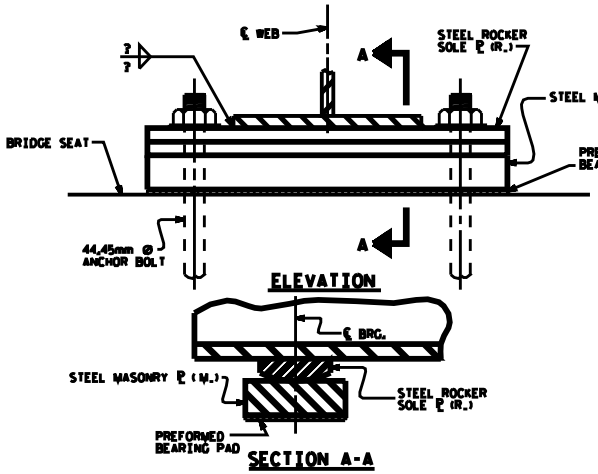

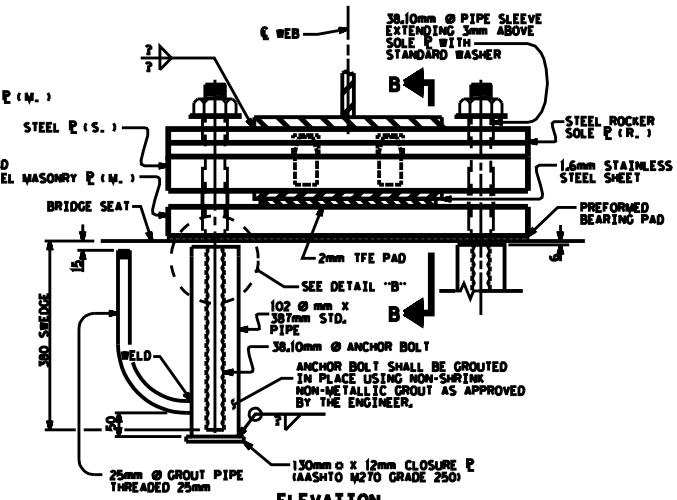

NOTES

AT FIXED POINTS OF SUPPORT, NUTS FOR ANCHOR BOLTS ARE TO BE TIGHTENED FINGER TIGHT AND THEN BACKED OFF ½ TURN. THE THREAD OF THE NUT & BOLT SHALL THEN BE BURRED WITH A SHARP POINTED TOOL.

THE 38.10mm ø PIPE SLEEVES SHALL BE CUT FROM SCHEDULE 40 PVC PIPE. THE PVC PIPE SHALL MEET THE REQUIREMENTS OF ASTM D1785M.

NO SEPARATE PAYMENT WILL BE MADE FOR THE PIPE SLEEVES. PAYMENT SHALL BE INCLUDED IN THE LUMP SUM CONTRACT PRICE BID FOR "TFE EXPANSION BEARING ASSEMBLIES".

ALL BEARING PLATES SHALL BE AASHTO M270 GRADE ....

ON PLATES TO BE PAINTED, ALL SHARP EDGES AND ENDS OF PLATES SHALL BE SLIGHTLY ROUNDED BY SUITABLE MEANS TO A RADIUS OF APPROXIMATELY 2mm OR EQUIVALENT FLAT SURFACE AT A SUITABLE ANGLE. THIS ROUNDING OF EDGES SHALL BE INCLUDED IN THE LUMP SUM CONTRACT PRICE BID FOR "TFE EXPANSION BEARING ASSEMBLIES".

THE CLOSURE ℙ & THE STANDARD PIPE FOR THIS ASSEMBLY NEED NOT BE GALVANIZED.

FOR TFE EXPANSION BEARING ASSEMBLIES, SEE SPECIAL PROVISIONS.

ANCHOR BOLTS SHALL BE GROUTED BEFORE FALSEWORK OR FORMS ARE PLACED.

CAMBERED GIRDER LENGTHS SHALL BE ADJUSTED AND BEARINGS ARE TO BE PLACED ON THE CAMBERED GIRDER SO AS TO BE ALIGNED WITH THE ANCHORS AFTER THE DEAD LOAD DEFLECTION HAS OCCURRED. SHOP PLANS SHALL BE PREPARED ACCORDINGLY.

ALL SURFACES OF BEARING PLATES SHALL BE SMOOTH AND STRAIGHT.

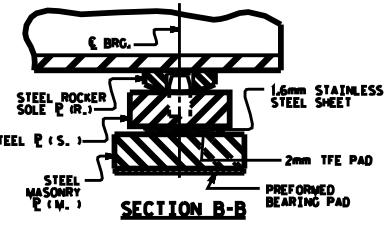

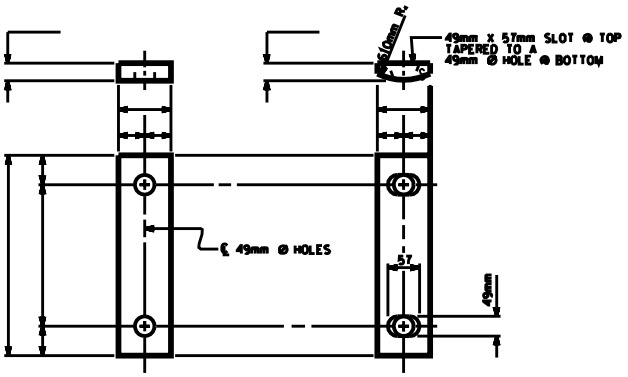

FIXED BEARING DETAILS

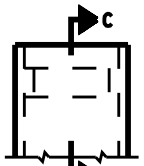

DETAIL "B"

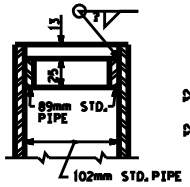

SECTION C-C

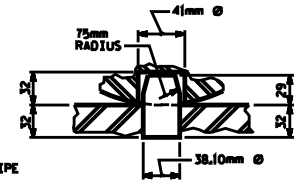

PINTLE DETAIL

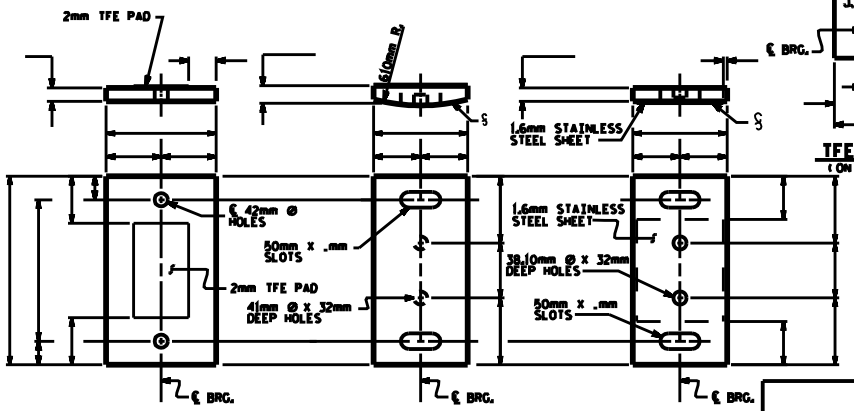

EXPANSION BEARING DETAILS

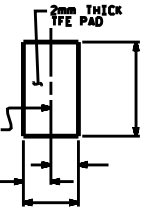

TFE PAD
(ON ℙ M.)

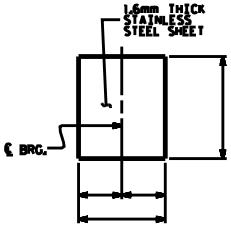

STAINLESS STEEL SHEET
(ON ℙ S.)

TABLE 1	
ITEM	NO. REQ'D
STEEL ROCKER SOLE ℙ (TYPE R.)	
STEEL ROCKER SOLE ℙ (TYPE R.)	
STEEL MASONRY ℙ (TYPE M.)	
STEEL MASONRY ℙ (TYPE M.)	
STEEL ℙ (TYPE S.)	
44.45mm ø x .mm ANCHOR BOLTS	
38.10mm ø x .mm ANCHOR BOLTS (SWEDGE TYPE)	

PROJECT NO. _____

_____ COUNTY

STATION: _____

USE .0011 X SCALE FOR PE SEAL

STATE OF NORTH CAROLINA
DEPARTMENT OF TRANSPORTATION
RALEIGH

STANDARD

TFE BEARING DETAILS

DETAILS ON THIS SHEET ARE NOT TO ANY SCALE

REVISIONS						SHEET NO.
NO.	BY:	DATE:	NO.	BY:	DATE:	TOTAL SHEETS

ASSEMBLED BY :		DATE :	
CHECKED BY :		DATE :	
DRAWN BY :	RMW 8/99	REV. 7/10/01	RMW/LES
CHECKED BY :	LES 8/99	REV. 5/17/03	RMW/JTE
		REV. 5/2/08	TLA/DM

TFEISM.STD

$$$$$$$STANDARD$$$$$$$
$$$$$$$